LTR	DESCRIPTION	DATE	APPROVED
C	REV PER ECO 3036	2/15/83	
D	REV PER ECO 3056 & 3046	3/11/83	

REVISIONS

LTR	ZONE	DESCRIPTION	DATE	APPROVED
A	—	UPDATED TO PRODUCTION CHANGES	9 SEP 82	
B		PRODUCTION RELEASE	1-28-83	

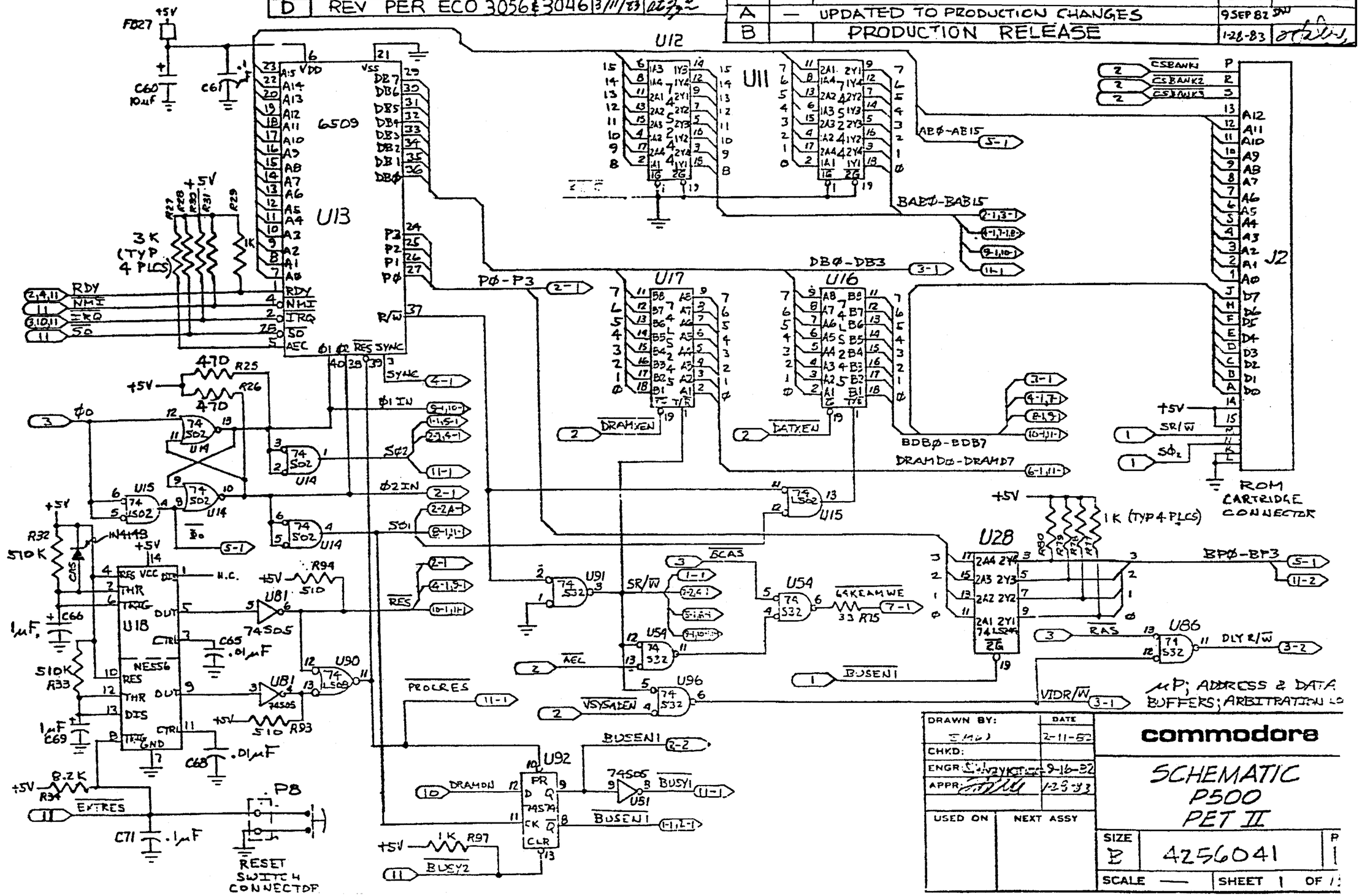

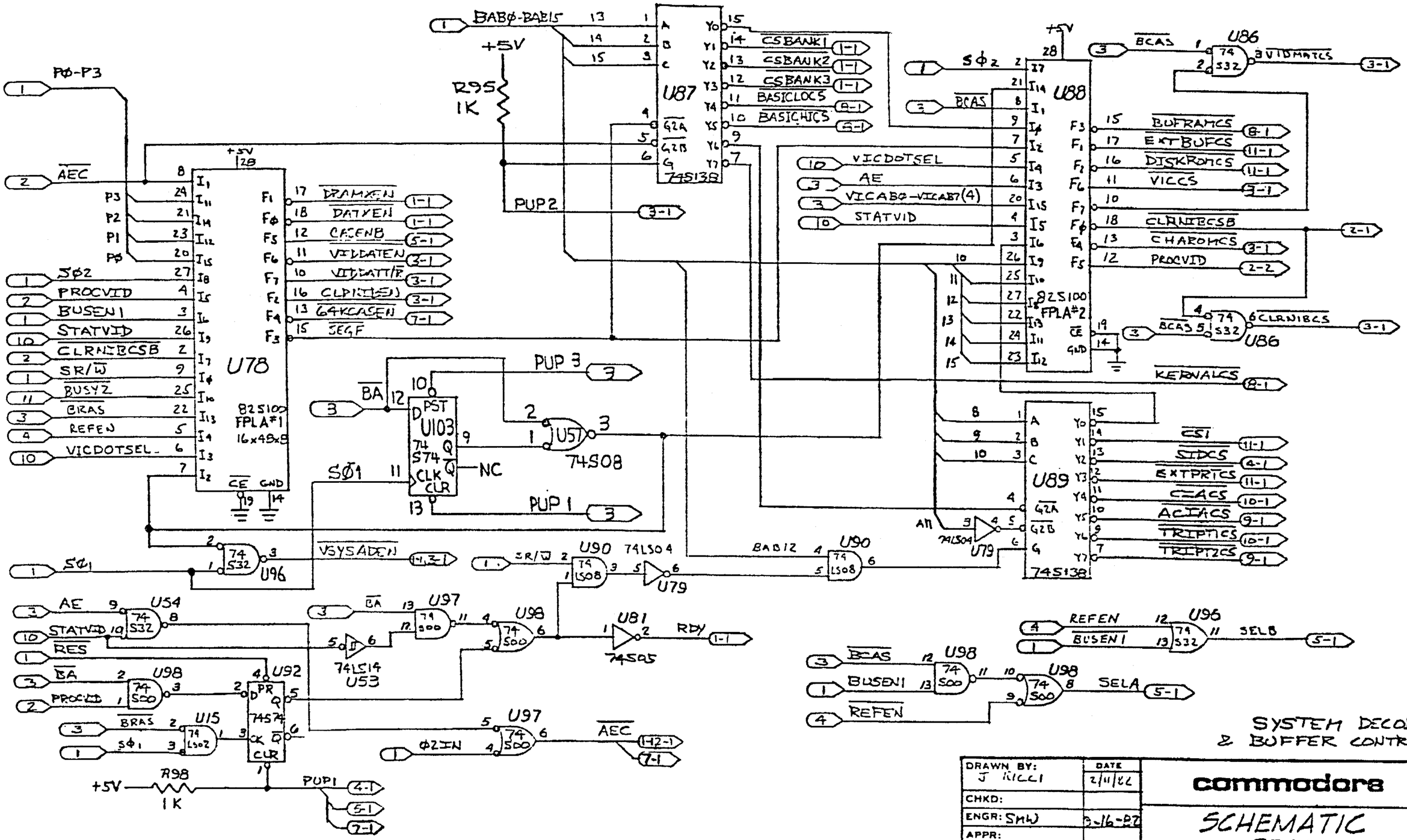
U78
82S100
FPLA#1
16x48x8
U87
74S138
U88
82S100
FPLA#2
U89
74S138
U103
74S74
U51
74S08
U96
74S32
U86
74S32
U90
74LS08
U79
74LS04
U54
74S32
U97
74S00
U98
74S00
U81
74S05
U53
74LS14
U92
74S74
U15
74LS02
R95
1K
R98
1K
+5V
BAB0-BAB15
CSBANK1
CSBANK2
CSBANK3
BASICLOCS
BASICHICS
VICDOTSEL
AE
VICAB0-VICAB7(4)
STATVID
BUFRAMCS
EXTBUFCS
DISKROMCS
VICCS
CLRNIBCSB
CHAROMCS
PROCVID
KERNALCS
CS1
SIDCS
EXTPRICS
C=ACS
ACIACS
TRIPTICS
TRIPTIZCS
VIDMATCS
CLRNIBCS
DRAMXEN
DATXEN
CASENB
VIDDATEN
VIDDATT/R
CLRNIBEN
64KCASEN
SEGF
PUP2
PUP3
PUP1
VSYSADEN
RDY
SELB
SELA
AEC
Φ2IN
P0-P3
SΦ2
BCAS
BA
RES
REFEN
BUSEN1
STATVID
CLRNIBCSB
SR/W
BUSY2
RAS
VICDOTSEL
SΦ1
NC
SYSTEM DECODE
& BUFFER CONTROL
DRAWN BY: J RICCI
DATE 2/11/82
CHKD:
ENGR: SMW 9-16-82
APPR:
USED ON
NEXT ASSY
commodore
SCHEMATIC
P500
PET II
SIZE B
4256041
REV D
SCALE ——
SHEET 2 OF 15

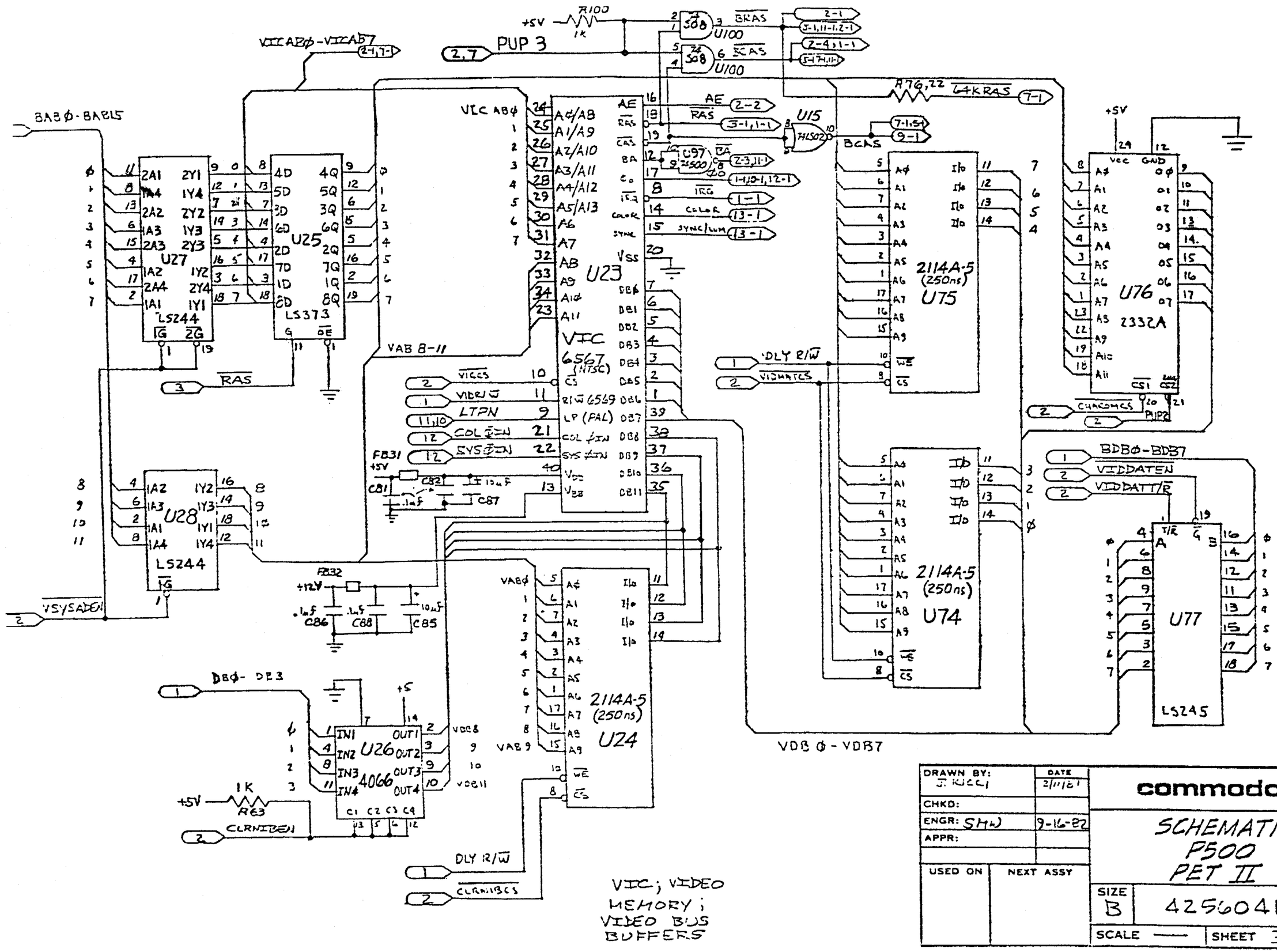

DRAWN BY: J. Kucci	DATE 2/11/81	commodore
CHKD:		SCHEMATIC P500 PET II
ENGR: SHW	9-16-82	
APPR:		
USED ON	NEXT ASSY	SIZE B · 4256041 · REV D
		SCALE —— · SHEET 3 OF 15

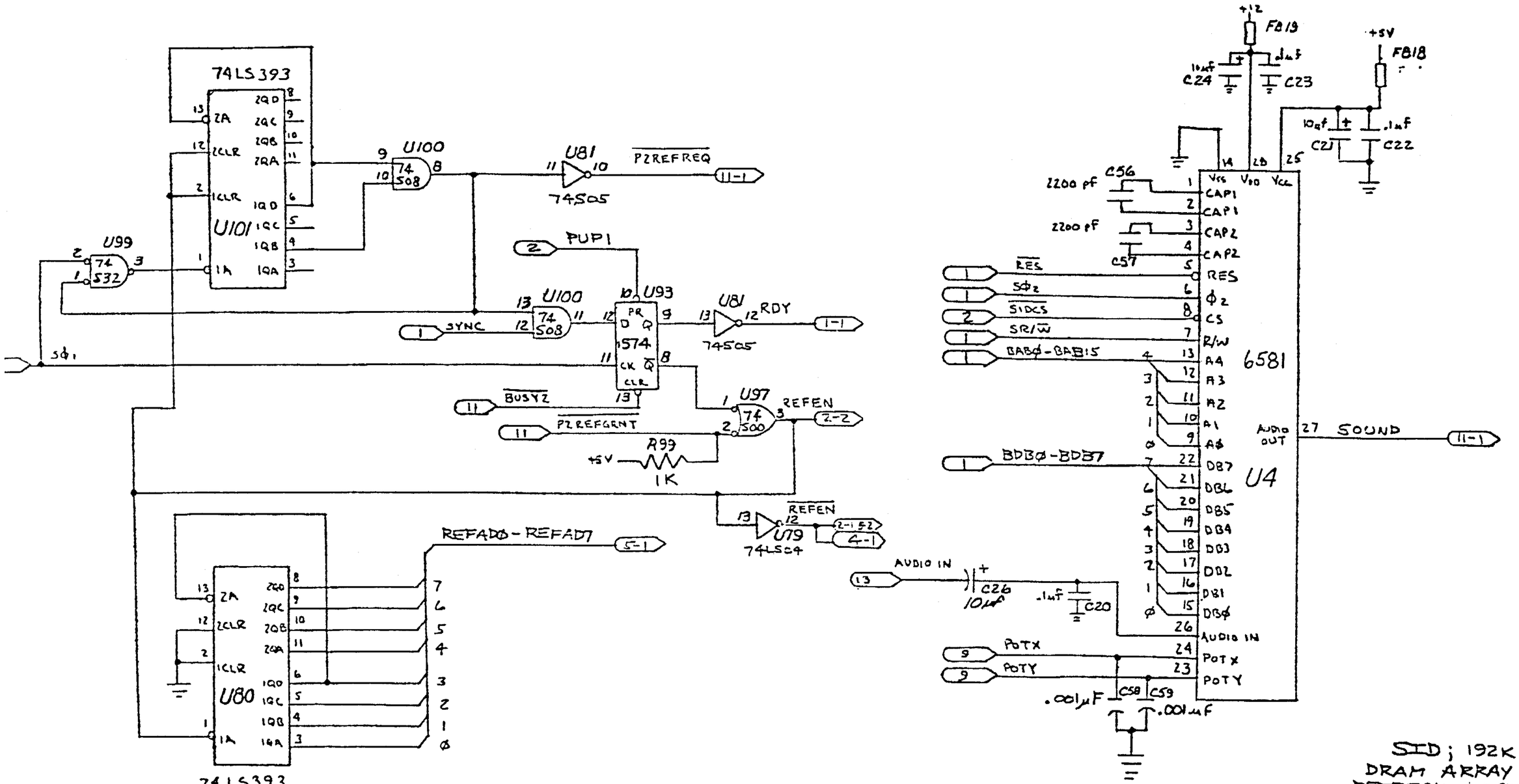

SID; 192K
DRAM ARRAY
REFRESH LOGIC

DRAWN BY: J. RICCI	DATE 2/12/82	commodore
CHKD:		SCHEMATIC P500 PET II
ENGR: SMW	9-16-82	
APPR:		
USED ON	NEXT ASSY	SIZE B · 4256041 · REV D
		SCALE —— · SHEET 4 OF 15

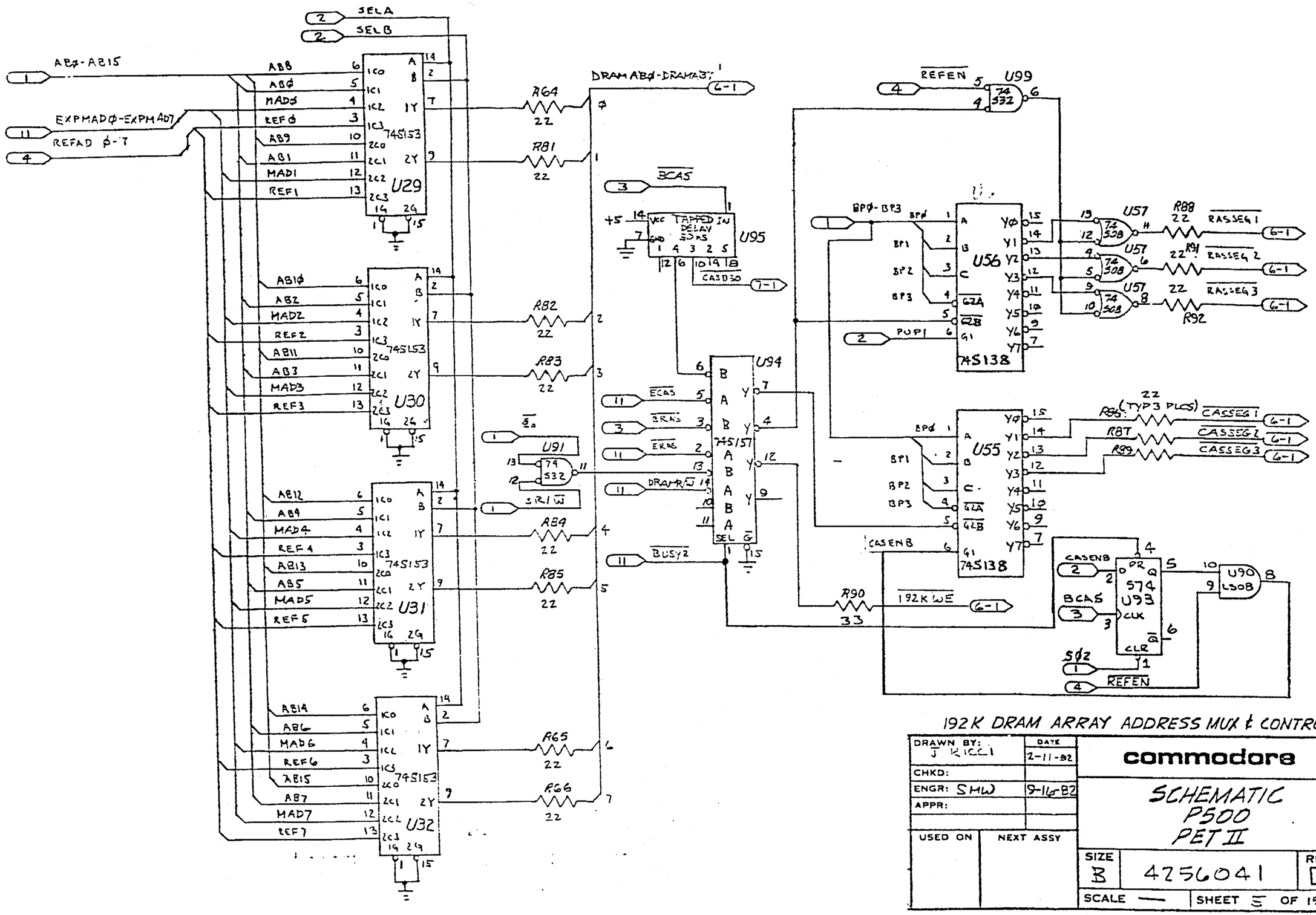

192K DRAM ARRAY ADDRESS MUX & CONTROL

DRAWN BY: J KICCI	DATE 2-11-82	commodore
CHKD:		SCHEMATIC P500 PET II
ENGR: SMW	9-16-82	
APPR:		
USED ON	NEXT ASSY	SIZE B · 4256041 · REV D
		SCALE — · SHEET 5 OF 15

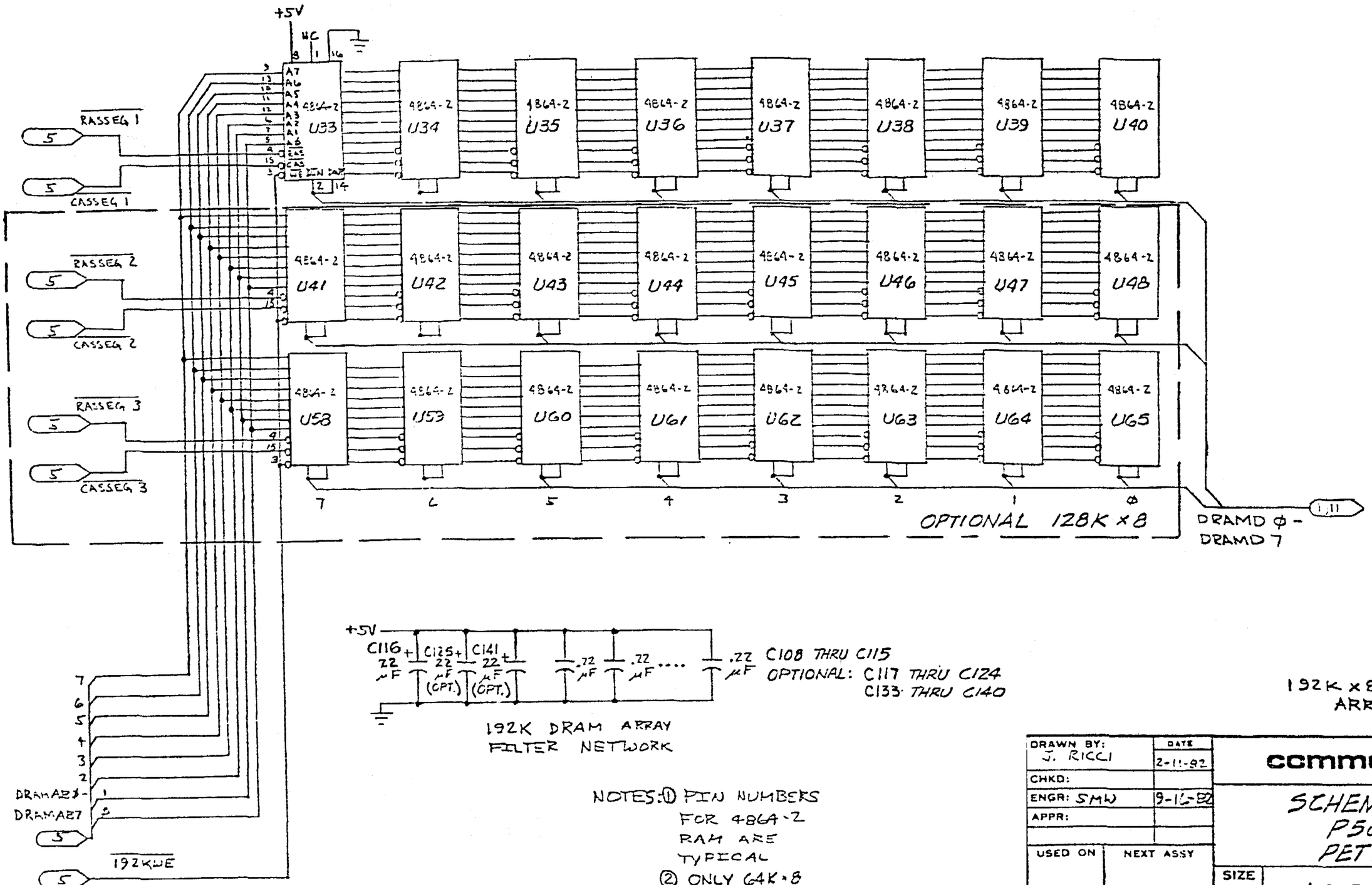

NOTES: ① PIN NUMBERS FOR 4864-2 RAM ARE TYPICAL

② ONLY 64K x 8 OF RAM IS INSTALLED IN BASE P500 SYSTEM.

DRAWN BY: J. RICCI	DATE 2-11-82	commodore
CHKD:		SCHEMATIC P500 PET II
ENGR: SMW	9-16-82	
APPR:		
USED ON	NEXT ASSY	SIZE B · 4256041 · REV D
		SCALE —— · SHEET 6 OF 15

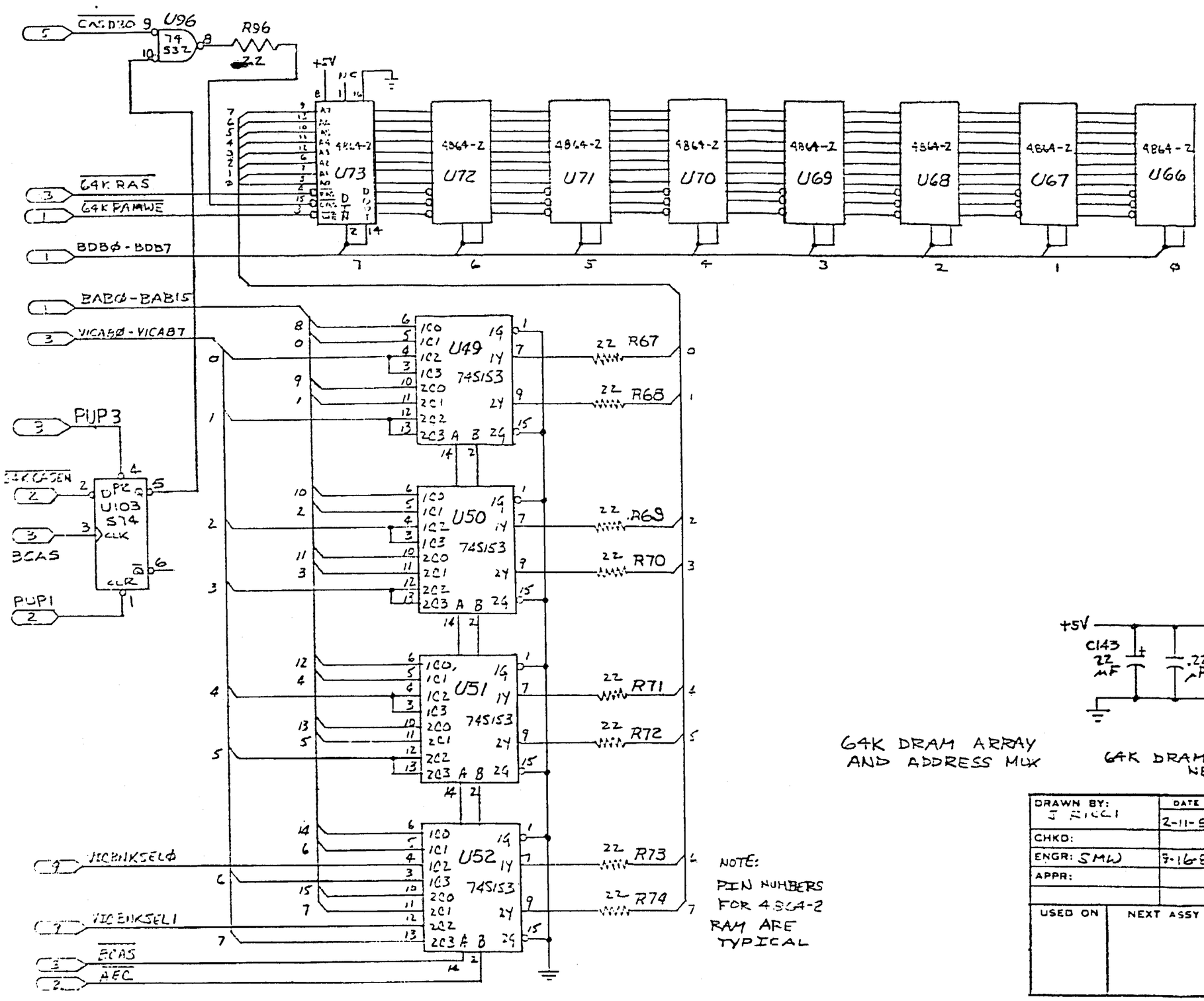

NOTE:
PIN NUMBERS FOR 4864-2 RAM ARE TYPICAL

64K DRAM ARRAY AND ADDRESS MUX

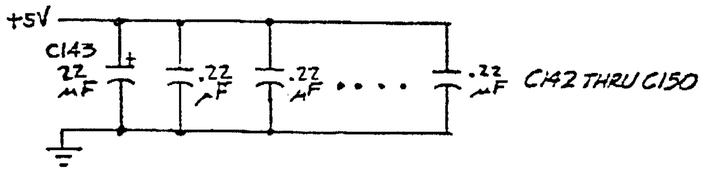

64K DRAM FILTER NETWORK

DRAWN BY: J RICCI	DATE 2-11-82	commodore	
CHKD:		SCHEMATIC P500 PET II	
ENGR: SMW	3-16-82		
APPR:			
USED ON	NEXT ASSY	SIZE B	4256041 REV D
		SCALE —	SHEET 7 OF 15

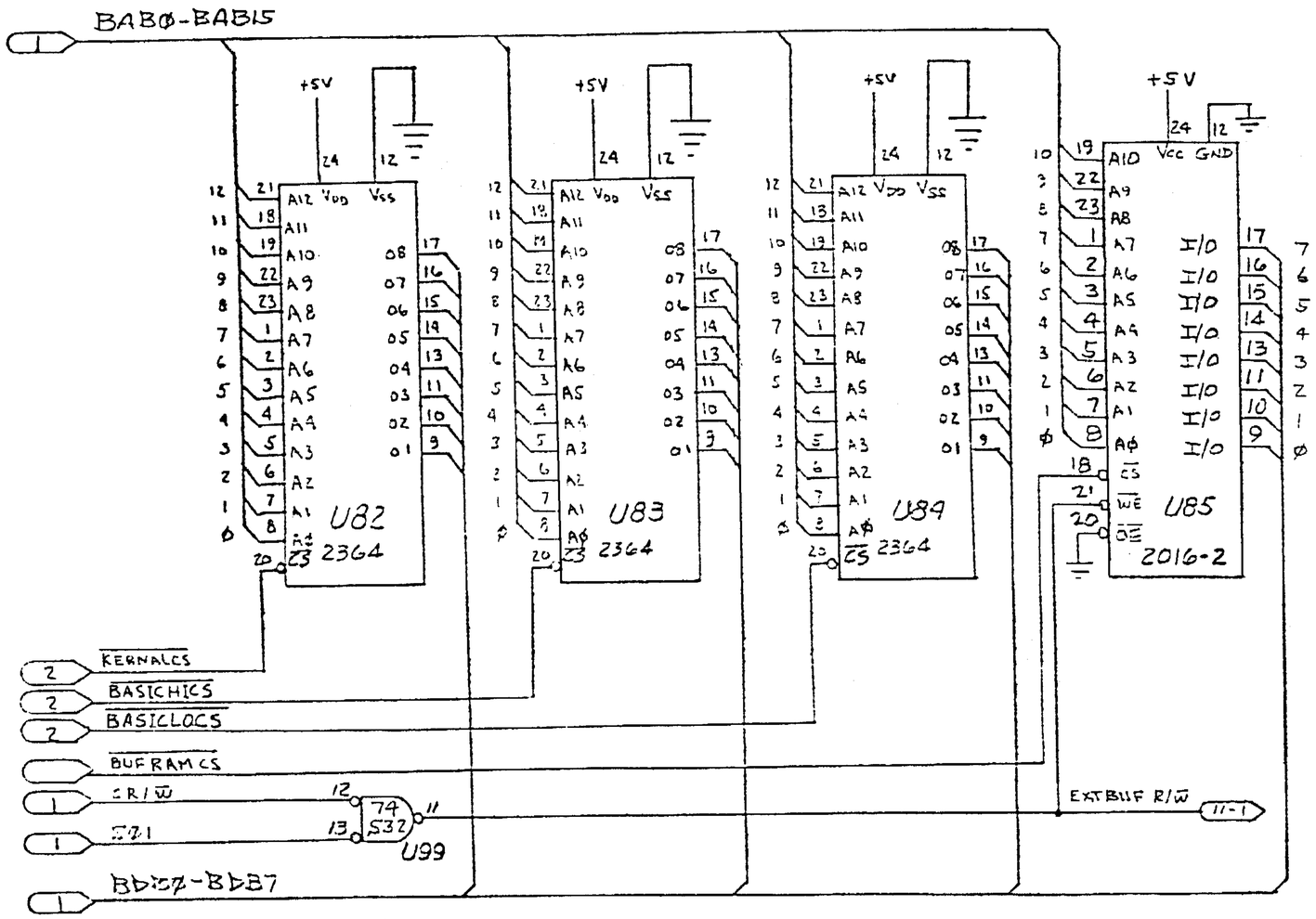

SYSTEM ROM/RAM ARRAY

DRAWN BY: J. [illegible]	DATE	commodore	
CHKD:			
ENGR: SMW	9-16-82	SCHEMATIC P500 PET II	
APPR:			
USED ON	NEXT ASSY	SIZE B	4256041	REV D
		SCALE —	SHEET 3 OF 15

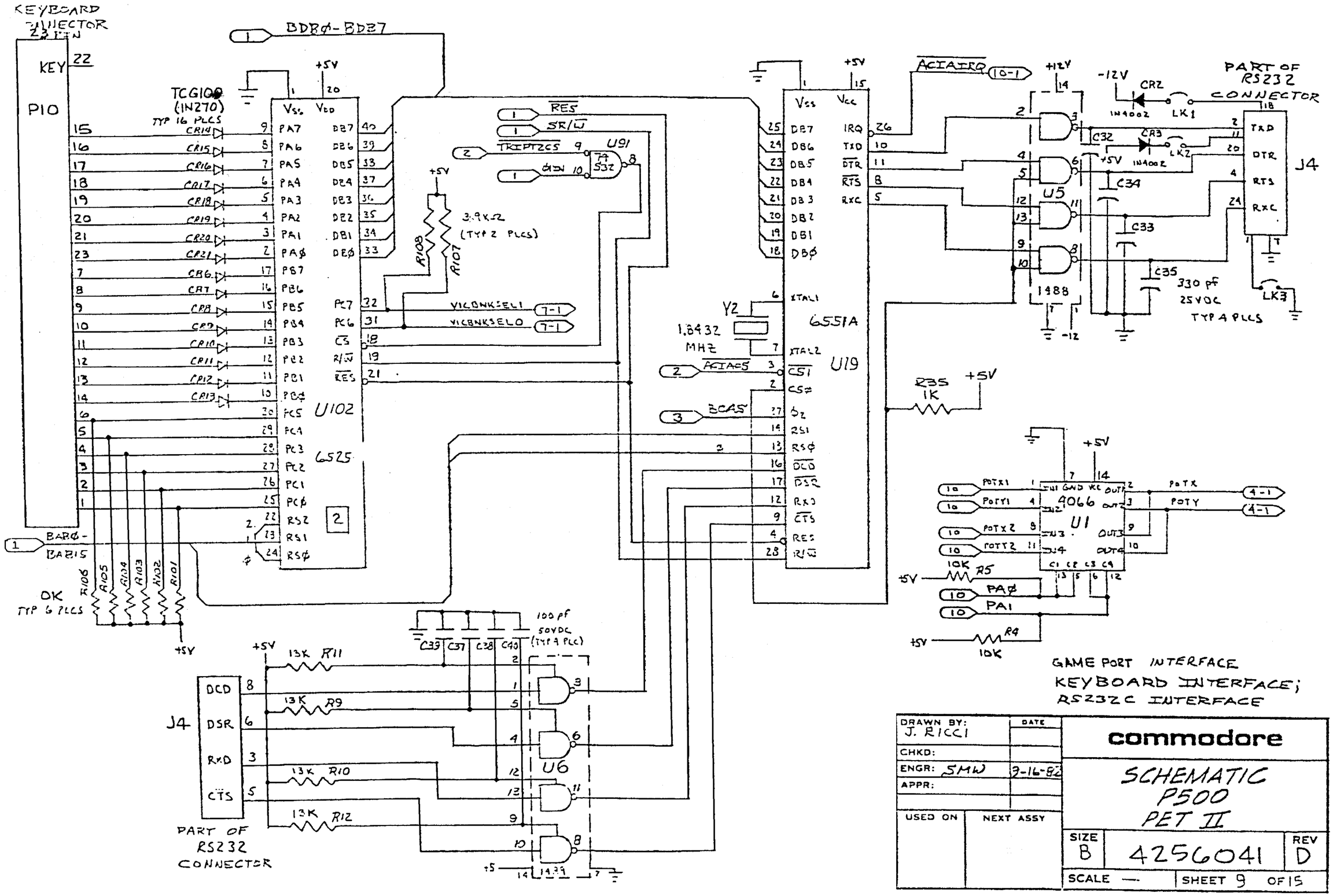

GAME PORT INTERFACE
KEYBOARD INTERFACE;
RS232C INTERFACE

DRAWN BY: J. RICCI	DATE	commodore
CHKD:		
ENGR: SMW	9-16-82	SCHEMATIC P500 PET II
APPR:		
USED ON	NEXT ASSY	SIZE B · 4256041 · REV D
		SCALE — · SHEET 9 OF 15

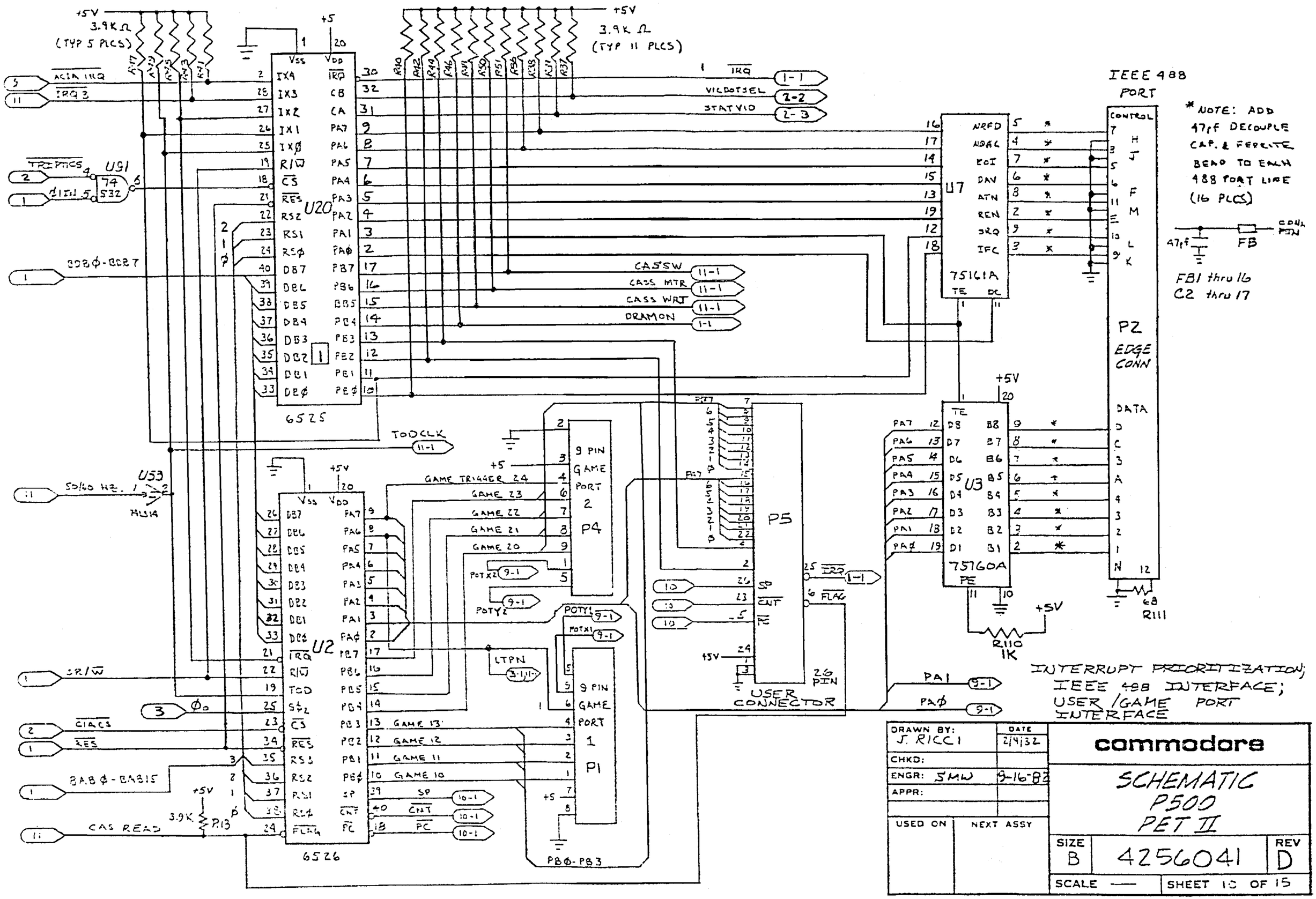

DRAWN BY: J. RICCI	DATE 2/4/82	commodore
CHKD:		SCHEMATIC P500 PET II
ENGR: SMW	9-16-82	
APPR:		
USED ON	NEXT ASSY	SIZE B · 4256041 · REV D
		SCALE — · SHEET 10 OF 15

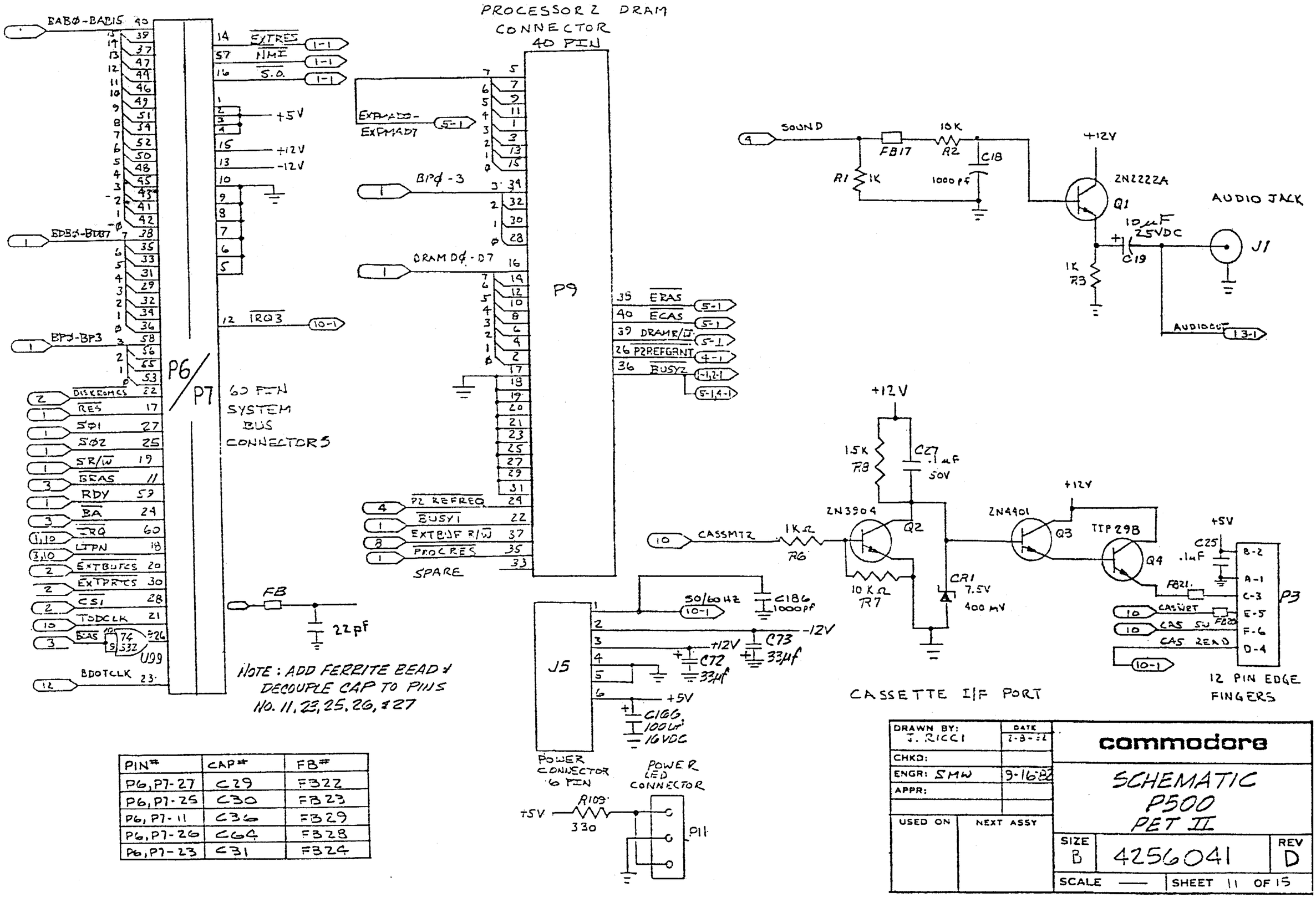

PIN#	CAP#	FB#
P6, P7-27	C29	FB22
P6, P7-25	C30	FB23
P6, P7-11	C36	FB29
P6, P7-26	C64	FB28
P6, P7-23	C31	FB24

DRAWN BY: J. RICCI	DATE 7-8-82	commodore
CHKD:		SCHEMATIC P500 PET II
ENGR: SMW	9-16-82	
APPR:		
USED ON	NEXT ASSY	SIZE B · 4256041 · REV D
		SCALE — · SHEET 11 OF 15

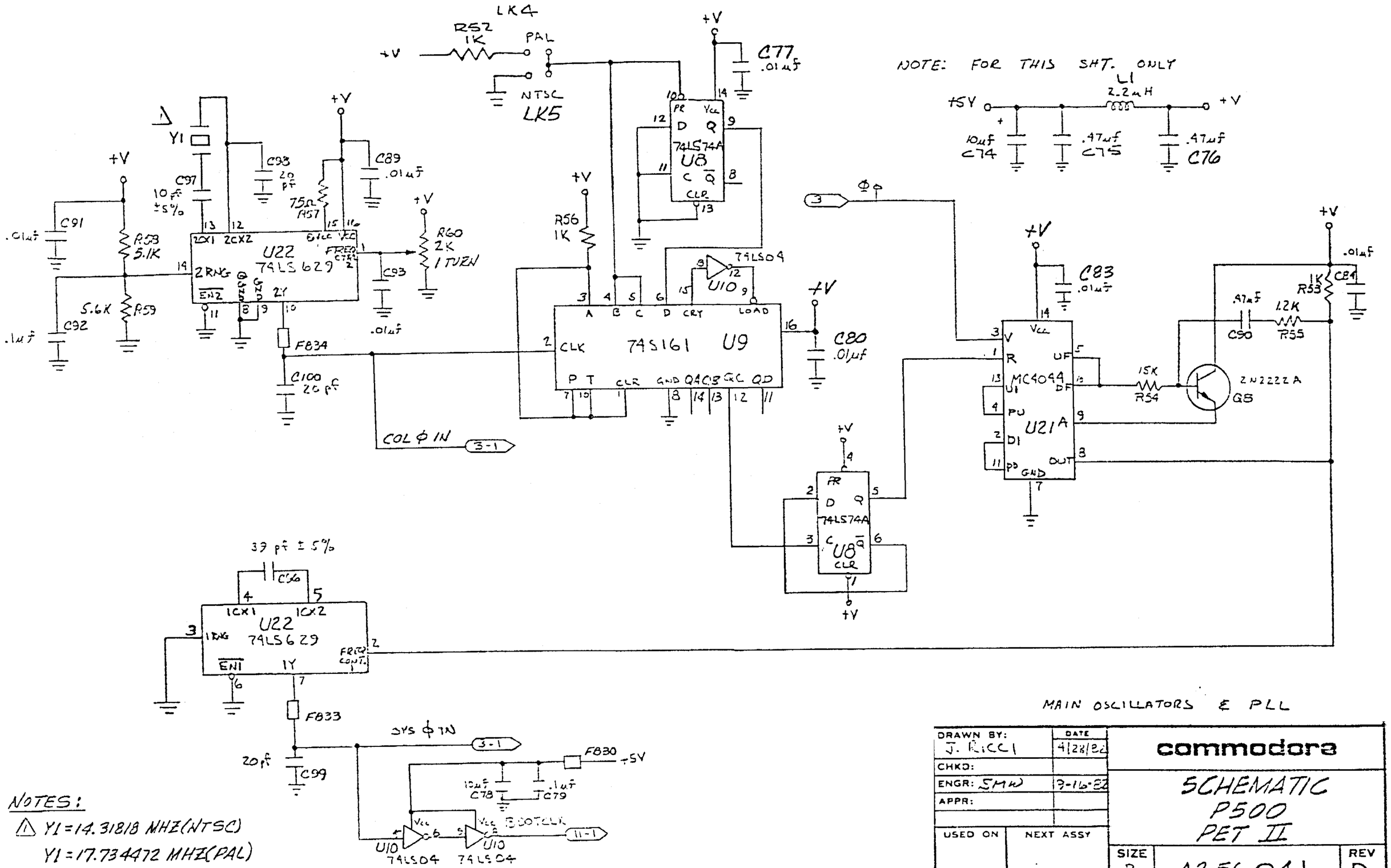

NOTES:

⚠ Y1 = 14.31818 MHZ (NTSC)
Y1 = 17.734472 MHZ (PAL)

MAIN OSCILLATORS & PLL

DRAWN BY: J. RICCI	DATE 4/28/82	commodore
CHKD:		SCHEMATIC P500 PET II
ENGR: SMW	9-16-82	
APPR:		
USED ON	NEXT ASSY	SIZE B · 4256041 · REV D
		SCALE — · SHEET 12 OF 15

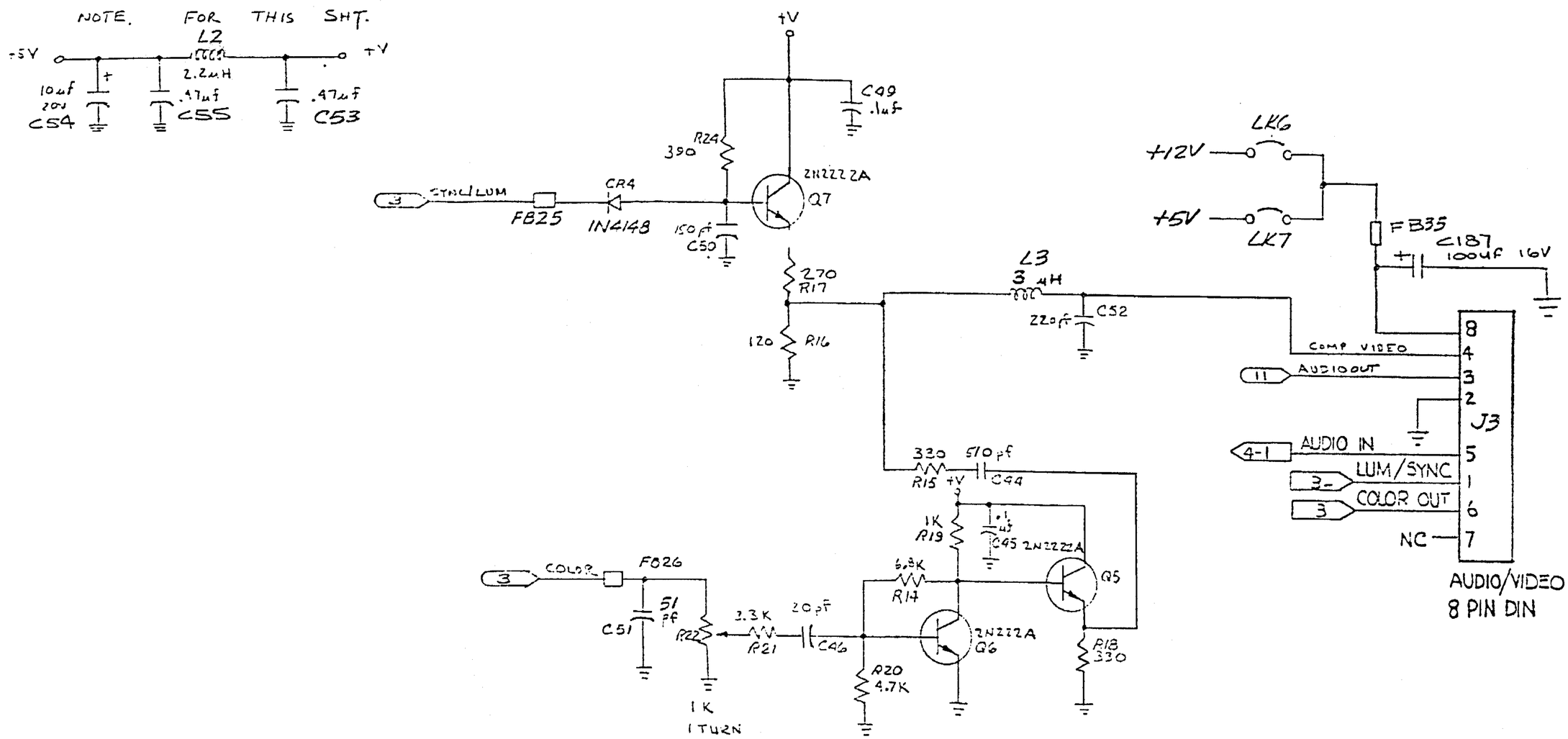

VIDEO OUTPUT CIRCUIT

DRAWN BY:	DATE	commodore
CHKD:		
ENGR: SMH	9-16-83	SCHEMATIC P500 PET II
APPR:		
USED ON	NEXT ASSY	SIZE B · 4256041 · REV D
		SCALE ~ · SHEET 13 OF 15

I.C.	CAP	GND PIN	+5V PIN
U1	—	7	14
U2	C41	1	20
U3	C179	10	20
U4	C22	14	25
U5	—	7	—
U6	—	7	14
U7	C43	10	20
U8	C77	7	14
U9	C80	8	16
U10	C79	7	14
U11	C168	1,10	20
U12	C169	1,10	20
U13	C61	21	6
U14	C170	7	14
U15	—	7	14
U16	C62	10	20
U17	C63	10	20
U18	C71	7	14
U19	C70	1	15
U20	C167	1	[illegible]
U21	C83	7	14
U22	C89	8,9	16,15
U23	C92	20	40
U24	C101	9	18
U25	C102	10	20
U26	—	7	14
U27	C103	10	20
U28	C185	10	20
U29	C104	8	16
U30	C105	8	16
U31	C106	8	16
U32	C107	8	16
U33	C108	16	8
U34	C109	16	8
U35	C110	16	8
U36	C111	16	8
U37	C112	16	8
U38	C113	16	8
U39	C114	16	8
U40	C115	16	8
U41	C117	16	8
U42	C118	16	8
U43	C119	16	8
U44	C120	16	8
U45	C121	16	8
U46	C122	16	8
U47	C123	16	8
U48	C124	16	8
U49	C126	8	16
U50	C127	8	16
U51	C128	8	16
U52	C129	8	16

I.C.	CAP	GND PIN	+5V PIN
U53	C130	7	14
U54	C174	7	14
U55	C171	8	16
U56	C131	8	16
U57	C132	7	14
U58	C133	16	8
U59	C134	16	8
U60	C135	16	8
U61	C136	16	8
U62	C137	16	8
U63	C138	16	8
U64	C139	16	8
U65	C140	16	8
U66	C142	16	8
U67	C144	16	8
U68	C145	16	8
U69	C146	16	8
U70	C147	16	8
U71	C148	16	8
U72	C149	16	8
U73	C150	16	8
U74	C151	9	18
U75	C175	9	18
U76	C173	12	24
U77	C152	10	20
U78	C172	[illegible]	28
U79	C153	7	14
U80	C153	7	14
U81	C153	7	14
U82	C154	12	24
U83	C155	12	24
U84	C156	12	24
U85	C157	12	24
U86	C158	7	14
U87	C176	8	16
U88	C177	4,19	28
U89	C178	8	16
U90	C159	7	14
U91	C180	1,7	14
U92	C181	7	14
U93	C160	7	14
U94	C182	8	16
U95	C161	7	14
U96	C162	7	14
U97	C183	7	14
U98	C163	7	14
U99	C184	7	14
U100	C164	7	14
U101	C164	7	14
U102	C165	1	20
U103	—	7	14

commodore

SCHEMATIC
P500
PET II

SIZE B | 4256041 | REV D

SCALE ~ | SHEET 14 OF 15

DRAWN BY: L.C.S. | DATE 7-15-82

CHKD:

ENGR: SMW | 9-16-82

APPR:

USED ON | NEXT ASSY

FPLA #1 (U78)

LOGIC EQUATIONS

$F_1 = \overline{DRAMXEN} = BUSEN1 \cdot (\overline{SEG\phi} + \overline{SEGF}) \cdot AEC$

$F_\phi = \overline{DATXEN} = AEC \cdot (SEG\phi + SEGF) \cdot (\overline{CLRNIBCS \cdot BA})$

$F_5 = CASENB = (\overline{SEG\phi} + \overline{SEGF}) \cdot BUSEN1 \cdot AEC \cdot \overline{REFEN} + BUSY2 \cdot \overline{REFEN}$

$F_6 = \overline{VIDDATEN} = BA \cdot S\phi2 \cdot PROCVID + \overline{AEC} \cdot \overline{STATVID} \cdot \overline{VICDOTSEL} + \overline{AEC} \cdot \overline{STATVID} \cdot S\phi2 + \overline{AEC} \cdot \overline{VICDOTSEL} \cdot \overline{S\phi2}$

$F_7 = VIDDAT\ T/\overline{R} = AEC \cdot PROCVID \cdot SR/\overline{W}$

$F_2 = CLRNIBEN = \overline{CLRNIBCS} \cdot S\phi2 \cdot BA$

$F_4 = \overline{64KCASEN} = SEG\phi \cdot AEC + \overline{STATVID} \cdot \overline{AEC} \cdot \overline{VICDOTSEL} + \overline{AEC} \cdot \overline{STATVID} \cdot S\phi2 + \overline{AEC} \cdot \overline{VICDOTSEL} \cdot \overline{S\phi2}$

$F_3 = \overline{SEGF} = (\overline{P3 \cdot P2 \cdot P1 \cdot P\phi})$

FPLA #2 (U88)

LOGIC EQUATIONS

$F_0 = \overline{CLRNIBCSB} = \overline{AE} \cdot S\phi2 + A15 \cdot A14 \cdot \overline{A13} \cdot A12 \cdot \overline{A11} \cdot A10 \cdot SEGF \cdot S\phi2 \cdot AE + A15 \cdot A14 \cdot \overline{A13} \cdot A12 \cdot \overline{A11} \cdot A10 \cdot SEGF \cdot S\phi2 \cdot STATVID$

$F_1 = \overline{EXTBUFCS} = BANK\ \phi \cdot \overline{A12} \cdot A11$

$F_2 = \overline{DISCROMCS} = BANK\phi \cdot A12$

$F_3 = \overline{BUFRAMCS} = BANK\ \phi \cdot \overline{A12} \cdot \overline{A11}$

$F_4 = \overline{CHAROMCS} = \overline{S\phi2} \cdot \overline{AE} \cdot VICDOTSEL + A15 \cdot A14 \cdot \overline{A13} \cdot \overline{A12} \cdot SEGF \cdot S\phi2 \cdot AE + A15 \cdot A14 \cdot \overline{A13} \cdot \overline{A12} \cdot SEGF \cdot S\phi2 \cdot STATVID$

$F_5 = PROCVID = SEGF \cdot A15 \cdot A14 \cdot \overline{A13} \cdot A12 \cdot \overline{A11} \cdot \overline{A10} + SEGF \cdot A15 \cdot A14 \cdot \overline{A13} \cdot A12 \cdot \overline{A11} \cdot A10 + SEGF \cdot A15 \cdot A14 \cdot \overline{A13} \cdot \overline{A12} + SEGF \cdot A15 \cdot A14 \cdot \overline{A13} \cdot VICEN$

$F_6 = \overline{VICCS} = \overline{VICEN} \cdot BA$

$F_7 = (\overline{VIDMATICS}) = \overline{AE} \cdot S\phi2 \cdot VAB12 \cdot STATVID + A15 \cdot A14 \cdot \overline{A13} \cdot A12 \cdot \overline{A11} \cdot \overline{A10} \cdot SEGF \cdot S\phi2 \cdot AE + A15 \cdot A14 \cdot \overline{A13} \cdot A12 \cdot \overline{A11} \cdot \overline{A10} \cdot SEGF \cdot S\phi2 \cdot STATVID$

DRAWN BY: D.R.H.	DATE 9-15-82	commodore	
CHKD:		SCHEMATIC P500 PET II	
ENGR: SMW	9-16-82		
APPR:			
USED ON	NEXT ASSY	SIZE B	4256041	REV D
		SCALE ~	SHEET 15 OF 15